FURON®
Pure Performance

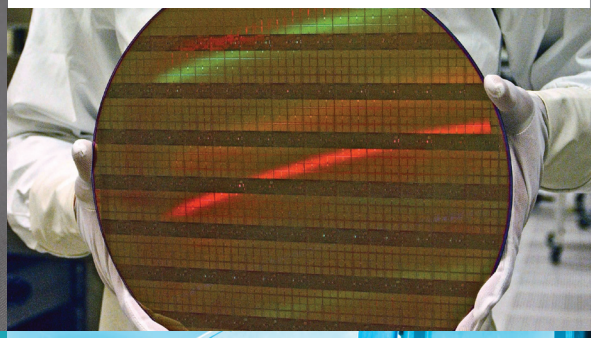

Furon® UPX Valve

Manually Actuated 3-Way, Multi-Turn Valve (1/4, 1/2" & 3/4" Orifice)

Description

Furon UPX Valves are specifically designed for safe and reliable transfer of highly aggressive chemicals, including concentrated HF and HCl. UPX Valves are specifically designed for safe and reliable transfer of highly aggressive chemicals, including concentrated HF and HCl. Our proprietary technology protects the valve's working components from degradation due to chemical attacks. The wetted flow path constructed from 100% virgin PFA, assuring compliance with the highest purity standards. Additionally, the UPX Valves are capable of handling a wide variety of abrasive slurries and have a long track record of success in slurry applications.

Furon UPX Valves offer a 24 month factory warranty.

Applications

Furon UPX Valves are ideal for use in the semiconductor industry, or other applications requiring ultra-high purity and/or superior chemical resistance.

- Designed for use in ultrapure deionized water and aggressive chemical applications
- Suitable for use in abrasive slurry
- Compatible with concentrated HF and HCl
- Market applications include Semiconductor, Flat Panel, Photovoltaic, and Chemical Processing

Features and Benefits

- Superior life expectancy over competitive valves
- Suitable for use in concentrated HF and HCl
- Suitable for use in abrasive slurries
- 100% virgin PTFE/PFA flow path
- Double diaphragm containment with standard leak detection port
- No exposed metallics
- Integral swivel base for freedom and ease of mounting
- Furon UPX Valve designs have been tested for more than 3 millions cycles

ASK AN ENGINEER

SAINT-GOBAIN

Furon UPX Valve - Manually Actuated, 3-Way Multi-Turn

Part Number	End Connection	Orifice (in.)	Port Size (in.)	A	B	C	ØD	E	F
UPX3-F44-MT	FlareGrip® II	1/4	1/4	4.30 (109.22 mm)	1.38 (35.05 mm)	4.13 (106.90 mm)	2.12 (53.85 mm)	2.72 (69.09 mm)	2.20 (55.88mm)
UPX3-S30044-MT	Nippon Pillar Super 300®	1/4	1/4	Please contact us					
UPX3-F46-MT	FlareGrip® II	1/4	3/8	4.70 (119.38 mm)					2.35 (59.69 mm)
UPX3-S30046-MT	Nippon Pillar Super 300®	1/4	3/8	Please contact us					
UPX3-744-MT	Fusebond™	1/4	1/4	4.90 (124.46 mm)					2.50 (63.50 mm)
UPX3-F88-MT	FlareGrip® II	1/2	1/2	5.60 (142.24 mm)	1.70 (43.18 mm)	5.00 (127.0 mm)	2.90 (73.66 mm)	3.62 (91.95 mm)	2.80 (71.12 mm)
UPX3-S30088-MT	Nippon Pillar Super 300®	1/2	1/2	5.50 (139.70 mm)					
UPX3-F812-MT	FlareGrip® II	1/2	3/4	5.90 (149.86 mm)					2.95 (74.93 mm)
UPX3-S300812-MT	Nippon Pillar Super 300®	1/2	3/4	7.20 (182.88 mm)					
UPX3-788-MT	Fusebond™	1/2	1/2	5.60 (142.24 mm)					2.80 (71.12 mm)
UPX3-7812-MT	Fusebond™	1/2	3/4	5.90 (169.86 mm)					2.94 (74.67 mm)
UPX3-F1212-MT	FlareGrip® II	3/4	3/4	6.30 (160.02 mm)	1.90 (48.26 mm)	5.30 (134.62 mm)	3.40 (86.36 mm)	4.20 (106.68 mm)	3.15 (80.01 mm)
UPX3-S300-1212-MT	Nippon Pillar Super 300®	3/4	3/4	8.00 (203.20 mm)					
UPX3-F1216-MT	FlareGrip® II	3/4	1	6.90 (175.26 mm)					3.45 (87.63 mm)
UPX3-S300-1216-MT	Nippon Pillar Super 300®	3/4	1	8.00 (203.20 mm)					
UPX3-71212-MT	Fusebond™	3/4	3/4	5.90 (149.86 mm)					2.95 (74.93 mm)
UPX3-71216-MT	Fusebond™	3/4	1	5.80 (147.32 mm)					2.90 (73.66 mm)

HCl more than 2.1 million cycles
HF more than 1.1 million cycles

Operating Specifications

Operating Pressure*	100 psig (6.9 bar)
Back Pressure*	Up to 100 psig (6.9 bar) based on the model**
Flow	C_V 0.8 (1/4″), C_V 3.2 (1/2″), C_V 7.0 (3/4″)
Max Operating Temperature+	230°F (110°C)++
Body	PFA
Diaphragm	Modified PTFE
Top Cap	ETFE

* At room temperature
** Please consult factory for more information.
\+ Please contact factory for higher temperature
++ Its recommended to use a FuseBond™ or Nippon Pillar Super 300® connection over flare fitting for high temperature application

Options

- PFA Flare nuts (add -3)
- Other end connection types available. Please consult factory for:
  - FNPT
  - Sanitary Flange
  - Tube End

©2020 Saint-Gobain Performance Plastics

Furon UPX Valve - Manually Actuated, 3-Way Multi-Turn

Drawings

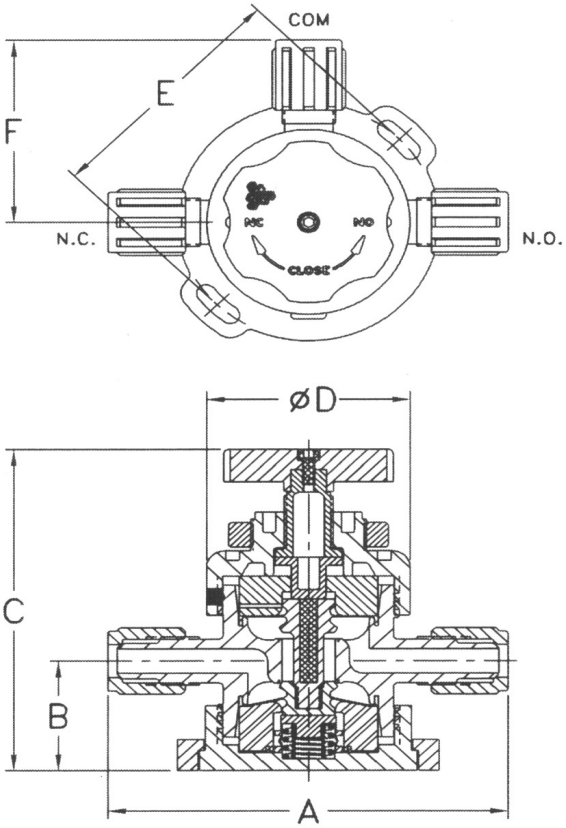

U.S. Patents 5,967,173 & 5,261,442

Saint-Gobain Performance Plastics
7301 Orangewood Avenue
Garden Grove, CA 92841

1-800-833-5661
Tel: (714) 630-5818
Fax: (714) 688-2614

www.processsystems.saint-gobain.com

NOTE: The data and details given in this document are correct and up to date. This document is intended to provide information about the product and possible applications. This document is not the product specification and does not provide specific features, nor does it guarantee product performance in specific applications. Saint-Gobain cannot anticipate or control the conditions of the field and for this reason strongly recommends that practical tests are conducted to ensure that the product meets the requirements of a specific application.

Furon®, FlareGrip® and FuseBond™ are registered trademarks of Saint-Gobain Performance Plastics. Nippon Pillar Super 300® is a registered trademark of Nippon Pillar Packing Co..

IMPORTANT: It is the user's responsibility to ensure the suitability and safety of Saint-Gobain Performance Plastics products for all intended uses and that the components to be used comply with all applicable regulatory requirements. Saint-Gobain Performance Plastics assumes no responsibility for any product failures that occur due to misuse arising out of the design, fabrication or application of the products into which they are incorporated.

WARRANTY: For a period of 24 months from the date of first sale, Saint-Gobain Performance Plastics warrants this product to be free of defects in materials and workmanship. The only obligation under any applicable product warranty will be to replace any portion proving defective, or at our option, to refund the purchase price thereof. THIS IS THE EXCLUSIVE WARRANTY AND IS EXPRESSLY IN LIEU OF ANY AND ALL OTHER OBLIGATIONS, GUARANTEES, WARRANTIES AND REPRESENTATIONS. SAINT-GOBAIN PERFORMANCE PLASTICS DISCLAIMS ALL IMPLIED WARRANTIES OF MERCHANTABILITY AND FITNESS FOR A PARTICULAR PURPOSE.

©2020 Saint-Gobain Performance Plastics