FURON®
Pure Performance

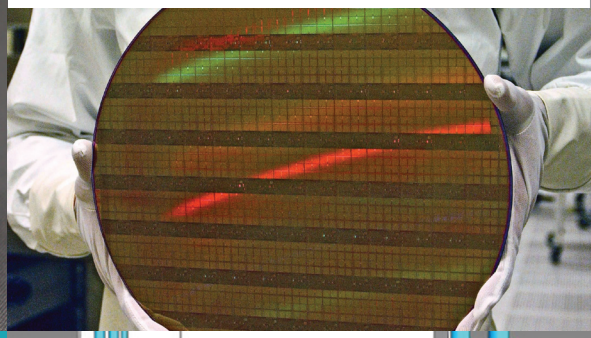

Furon® Q-Valve

Manual Actuated, Quarter-Turn 2-Way Valve (1/4", 1/2" & 3/4" Orifice)

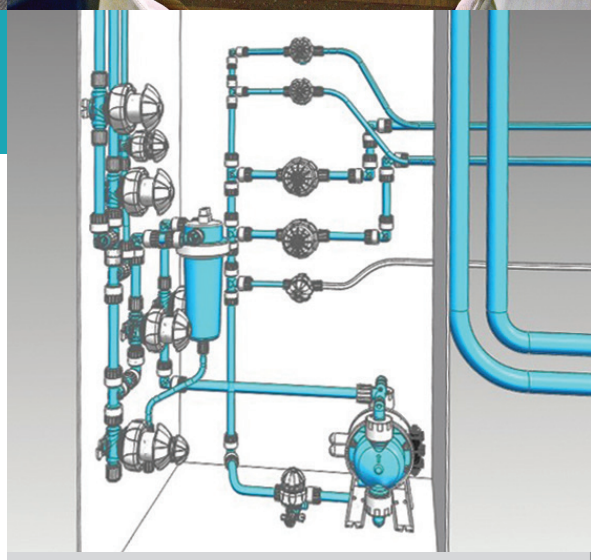

Description

Furon Q-Valves provide a high-performance, cost-effective solution that ensures reliable fluid delivery to critical process applications. Compatible with most common installations, the Furon Q-Valve offers “drop-in” replacement as a valve upgrade in new or existing applications. The Q-Valve designed and engineered to allow easy field maintenance with simple actuator and diaphragm replacement for low cost of ownership and superior system uptime.

Applications

The Furon Q-Valve is ideal for applications that demand ultra-high-purity media handling along with the high quality and performance standards that you expect from Furon valves. Primary applications include ultra-high-purity chemical delivery for semiconductor, photovoltaic, and chemical processing Furon Q-Valves are also proven to be highly reliable in abrasive slurry applications.

Features and Benefits

- 100% HP PFA and virgin PTFE wetted flow path
- Integrated visual position indication
- Bi-directional flow
- Leak detection port (1/4-28 UNF)
- Product has an integrated "place & turn" mounting base and may be delivered upon request with an additional snap base for optimum installation experience
- Assembled, tested and double-bagged in a clean room
- Metal-free construction
- Easy preventive maintenance
- Q-Valves have been tested for more than 3 million cycles.* **

* Please contact us or review our performance report for more details.

**Please contact us for additional testing information performed on the component.

ASK AN ENGINEER

PROCESS SYSTEMS

SAINT-GOBAIN

Furon Q-Valve – Manual Actuated, Quarter-Turn 2-Way Valve

Part Number	End Connection	Orifice (in.)	Port Size (in.)	A	B	C	D	E	F	Panel Cutout	Max. Panel Thickness
QV2-F44-M	FlareGrip® II	1/4	1/4	3.59 (91.2 mm)	0.52 (14.5 mm)	1.61 (40.9 mm)	4.38 (111.2 mm)	2.3 (58.4 mm)	2.94 (75 mm)	1.44 (36.6 mm)	0.45 (11.4 mm)
QV2-S30044-M	Nippon Pillar Super 300®	1/4	1/4	Please contact us							
QV2-F46-M	FlareGrip® II	1/4	3/8	4.13 (105 mm)							
QV2-S30046-M	Nippon Pillar Super 300®	1/4	3/8	Please contact us							
QV2-744-M	Fusebond	1/4	1/4	4.00 (101.6 mm)							
QV2-144-M	FNPT	1/4	1/4	2.35 (59.7 mm)							
QV2-F88-M	FlareGrip® II	1/2	1/2	4.48 (113.8 mm)	0.73 (18.5 mm)	1.85 (47.0 mm)	5.01 (127.2 mm)	2.9 (73.7 mm)	2.94 (75 mm)	1.44 (36.6 mm)	0.45 (11.4 mm)
QV2-S30088-M	Nippon Pillar Super 300®	1/2	1/2	4.30 (109.2 mm)							
QV2-F812-M	FlareGrip® II	1/2	3/4	5.28 (134.0 mm)							
QV2-S300812-M	Nippon Pillar Super 300®	1/2	3/4	Please contact us							
QV2-788-M	Fusebond	1/2	1/2	4.61 (117.0 mm)							
QV2-7812-M	Fusebond	1/2	3/4	5.28 (134.0 mm)							
QV2-186-M	FNPT	1/2	3/8	2.60 (66.0 mm)							
QV2-188-M	FNPT	1/2	1/2	2.60 (66.0 mm)							
QV2-F1212-M	FlareGrip® II	3/4	3/4	6.09 (154.8 mm)	0.97 (24.6 mm)	2.74 (69.5 mm)	6.63 (168.4 mm)	4.2 (107 mm)	4.08 (103 mm)	N/A	N/A
QV2-S3001212-M	Nippon Pillar Super 300®	3/4	3/4	Please contact us							
QV2-F1216-M	FlareGrip® II	3/4	1	5.71 (145.0 mm)							
QV2-S3001216-M	Nippon Pillar Super 300®	3/4	1	Please contact us							
QV2-71212-M	Fusebond	3/4	3/4	5.75 (146.0 mm)							
QV2-71216-M	Fusebond	3/4	1	5.71 (145.0 mm)							

Ordering & Technical Specifications

	1/4″ Orifice	1/2″ Orifice	3/4″ Orifice
Operating Pressure	80 psig (5.5 bar)	80 psig (5.5 bar)	80 psig (5.5 bar)
Back Pressure	80 psig (5.5 bar)	80 psig (5.5 bar)	80 psig (5.5 bar)
Flow	C_V 0.8	C_V 3.5	C_V 9.4
Base Plate	1115349	1115706	1115708
Tool Kit	1112226	1112227	1112228
Actuator Repair Kit–M	1113964	1113668	1113972
Diaphragm Repair Kit	1113974	1113975	1113976
Operating Temperature	Ambient: 0°C to 60°C (32°F to 140°F) Media: 0°C to 95°C (32°F to 203°F)		
Body	High-Purity PFA		
Diaphragm	Modified PTFE		
Actuator Components & Mounting Base	Engineered Plastics		
Sample of Performance Test* **	HCl for more than 2.1 million cycles; HF for more than 2.1 million cycles; Slurry for more than 1.2 million cycles		

Flow is calculated (Using QV2-F46-NC, QV2-F812NC and QV2-F1216. When using smaller orifice connections flow will be reduced accordingly. Pneumatic and multi-turn versions are also available.

* Please consult factory or review our performance report for more details.
** Please consult factory for additional testing information performed on the component.

Options

- PFA Flare nuts (add -3)
- Valve directly equipped with base plate (add -100)
- Other connection types (tube ends, Nippon Pillar Super 300®).

Please consult our engineers for details.

©2020 Saint-Gobain Performance Plastics

Furon Q-Valve – Manual Actuated, Quarter-Turn 2-Way Valve

Drawings

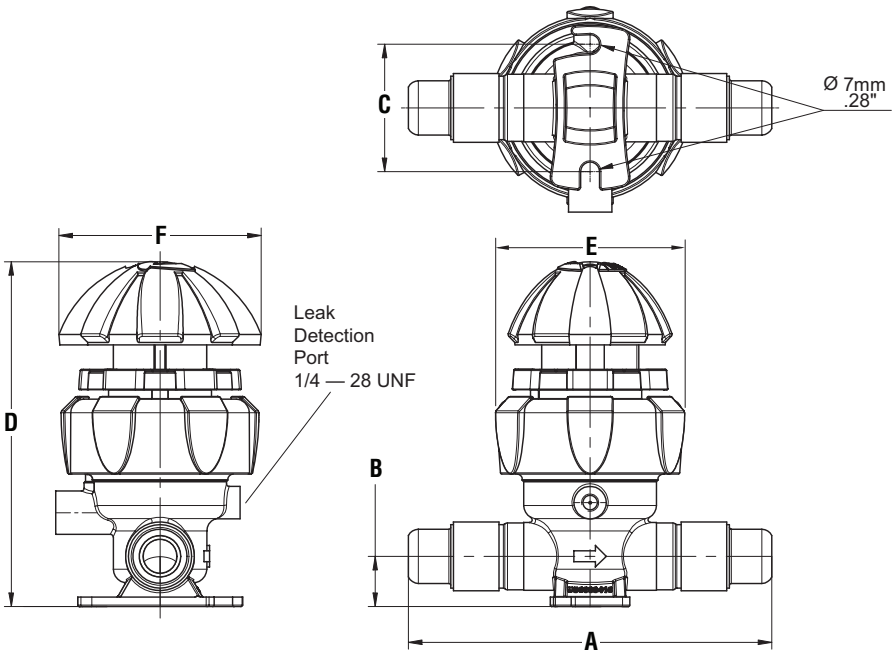

Saint-Gobain Performance Plastics
7301 Orangewood Avenue
Garden Grove, CA 92841

1-800-833-5661
Tel: (714) 630-5818
Fax: (714) 688-2614

Saint-Gobain Performance Plastics - France
56, Chemin des Berthilliers
71850 Charnay-lès-Mâcon, France

Tel: (33) 3-85-20-27-00
Fax: (33) 3-85-29-18-48

www.processsystems.saint-gobain.com

NOTE: The data and details given in this document are correct and up to date. This document is intended to provide information about the product and possible applications. This document is not the product specification and does not provide specific features, nor does it guarantee product performance in specific applications. Saint-Gobain cannot anticipate or control the conditions of the field and for this reason strongly recommends that practical tests are conducted to ensure that the product meets the requirements of a specific application.

Furon®, FlareGrip® and FuseBond™ are registered trademarks of Saint-Gobain Performance Plastics. Nippon Pillar Super 300® is a registered trademark of Nippon Pillar Packing Co..

IMPORTANT: It is the user's responsibility to ensure the suitability and safety of Saint-Gobain Performance Plastics products for all intended uses and that the components to be used comply with all applicable regulatory requirements. Saint-Gobain Performance Plastics assumes no responsibility for any product failures that occur due to misuse arising out of the design, fabrication or application of the products into which they are incorporated.

WARRANTY: For a period of 12 months from the date of first sale, Saint-Gobain Performance Plastics warrants this product to be free of defects in materials and workmanship. The only obligation under any applicable product warranty will be to replace any portion proving defective, or at our option, to refund the purchase price thereof.
THIS IS THE EXCLUSIVE WARRANTY AND IS EXPRESSLY IN LIEU OF ANY AND ALL OTHER OBLIGATIONS, GUARANTEES, WARRANTIES AND REPRESENTATIONS.
SAINT-GOBAIN PERFORMANCE PLASTICS DISCLAIMS ALL IMPLIED WARRANTIES OF MERCHANTABILITY AND FITNESS FOR A PARTICULAR PURPOSE.

©2020 Saint-Gobain Performance Plastics